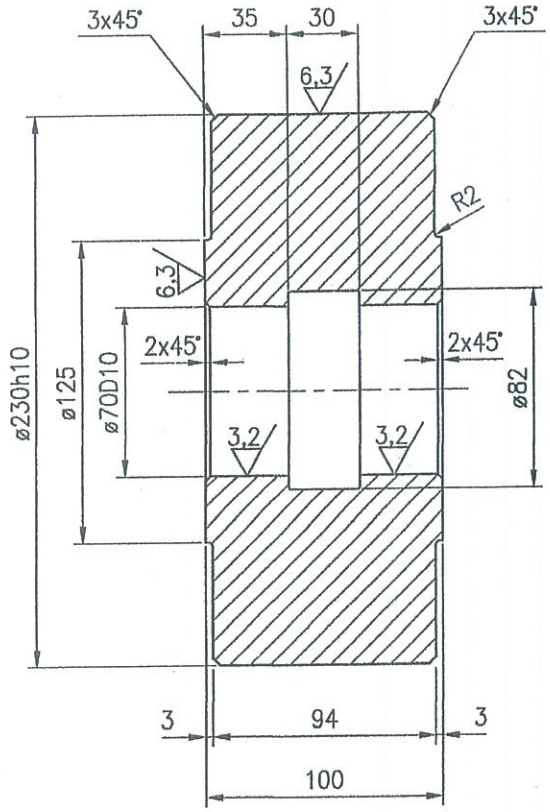

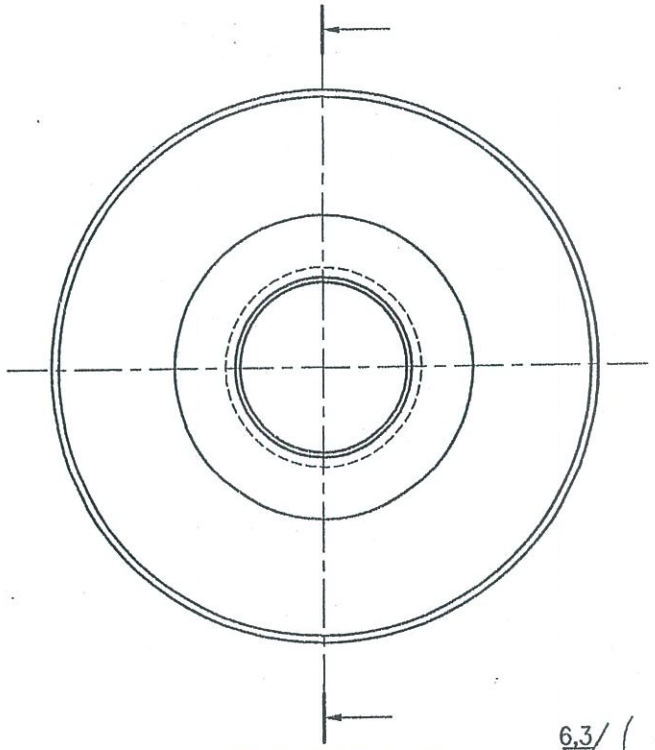

PN 940705

6,3 (3,2)

Rev. 3							
Rev. 2							
Rev. 1							
Original	180196	Sal	190196	Sal	19/1-96	BE	Revision in zone: / Description:
Scale:	Date	Sign.	Date	Sign.	Date	Sign.	Mat.: 133 St5ps kg: 27
1:2	Designed		Checked		Approved		Welds: ISO-E ISO-E ⊗

Apron feeder
Support
Roller

⊗ Pattern number, embossed / countersunk

Where nothing else is stated, adhere to general instructions No. 520530

Group no: 07.01

F.L.SMIDTH

FLS dwg. No.: 3.132979